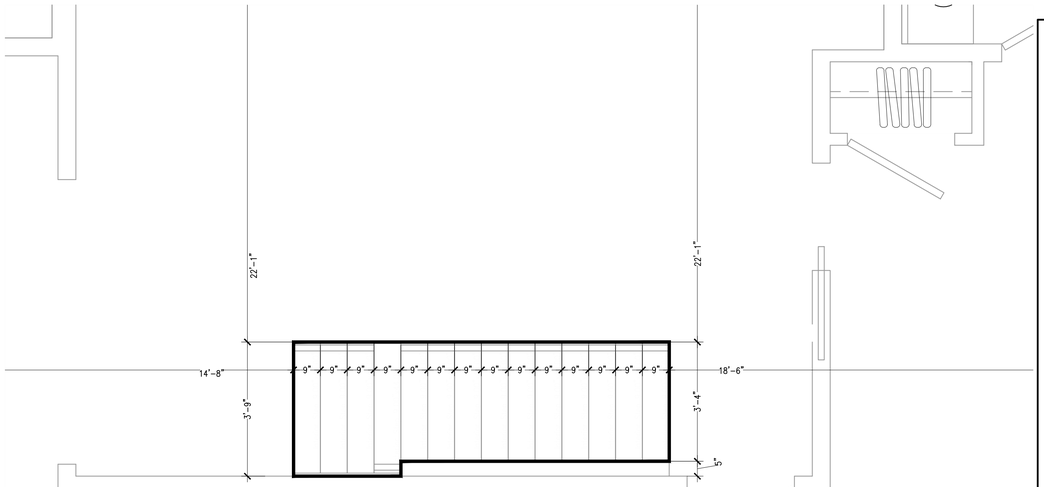

Dimensions are taken from interior of adjacent exterior wall.

Stair Details (First Floor)
SCALE 1/2" = 1'-0"

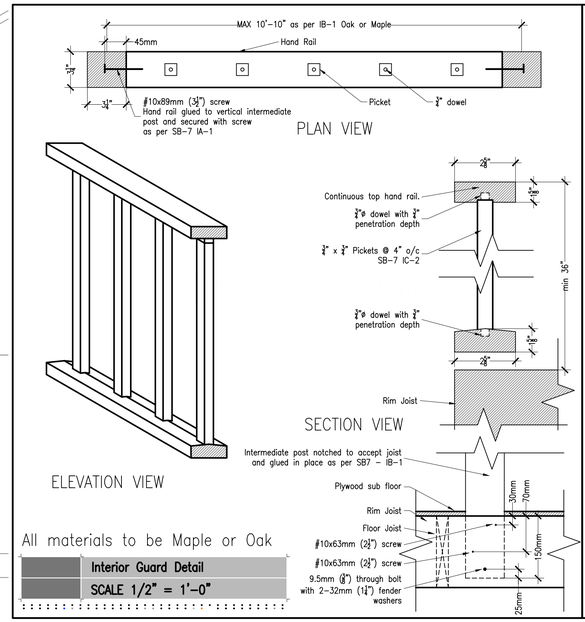

All materials to be Maple or Oak

Interior Guard Detail
SCALE 1/2" = 1'-0"

9.8.1.2. Stairs, and Guards in Garages
Stairs, ramps, handrails and guards located within a garage serve in the same way and create no greater or different hazard than if located within the dwelling unit. 9.8.6.2.(3) states; a landing may be omitted at the top of an exterior stair serving a garage or a secondary entrance to a single dwelling unit, including an entrance from an attached garage, provided, the stair does not contain more than three risers, the door is a sliding door or swings away from the stair, unless where a storm or screen door is provided, it may swing over the stair if it is equipped with hardware to hold it open.

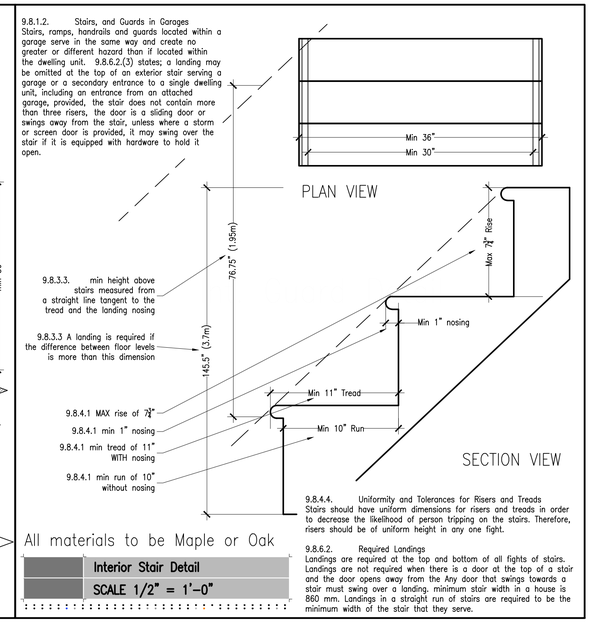

9.8.4.4. Uniformity and Tolerances for Risers and Treads
Stairs should have uniform dimensions for risers and treads in order to decrease the likelihood of person tripping on the stairs. Therefore, risers should be of uniform height in any one fight.

9.8.6.2. Required Landings
Landings are required at the top and bottom of all fights of stairs. Landings are not required when there is a door at the top of a stair and the door opens away from the Any door that swings towards a stair must swing over a landing. minimum stair width in a house is 860 mm. Landings in a straight run of stairs are required to be the minimum width of the stair that they serve.

All materials to be Maple or Oak

Interior Stair Detail
SCALE 1/2" = 1'-0"

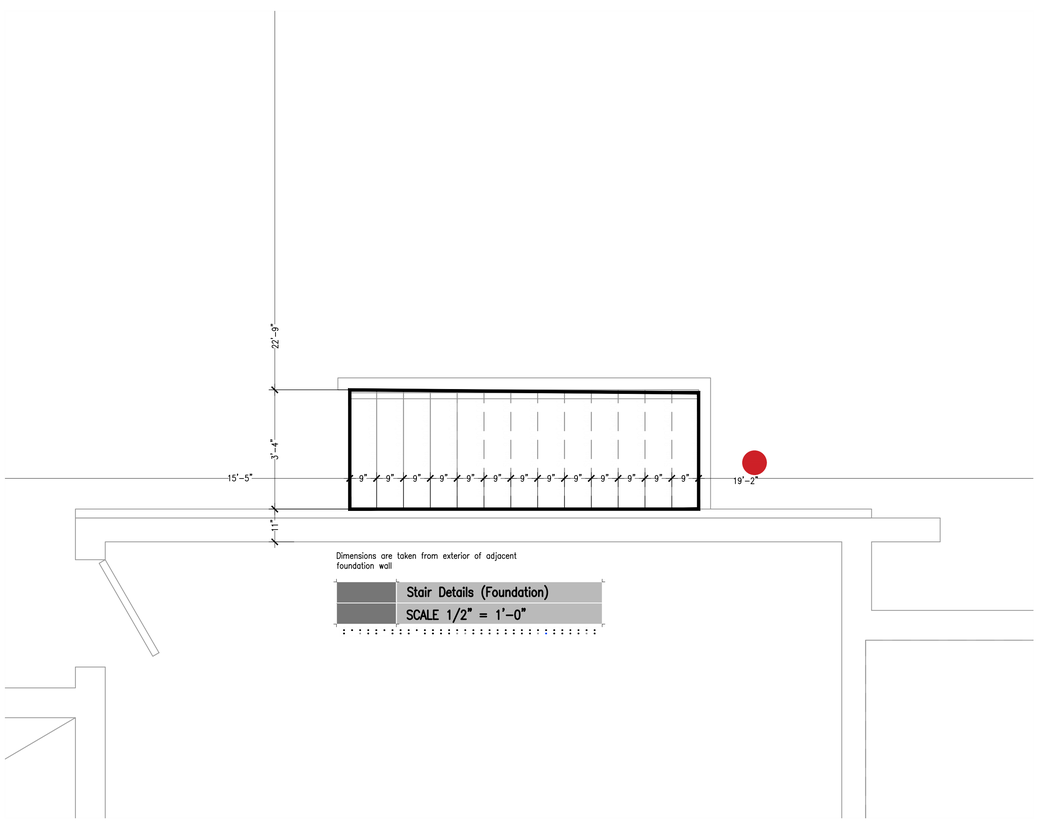

Dimensions are taken from exterior of adjacent foundation wall

Stair Details (Foundation)
SCALE 1/2" = 1'-0"

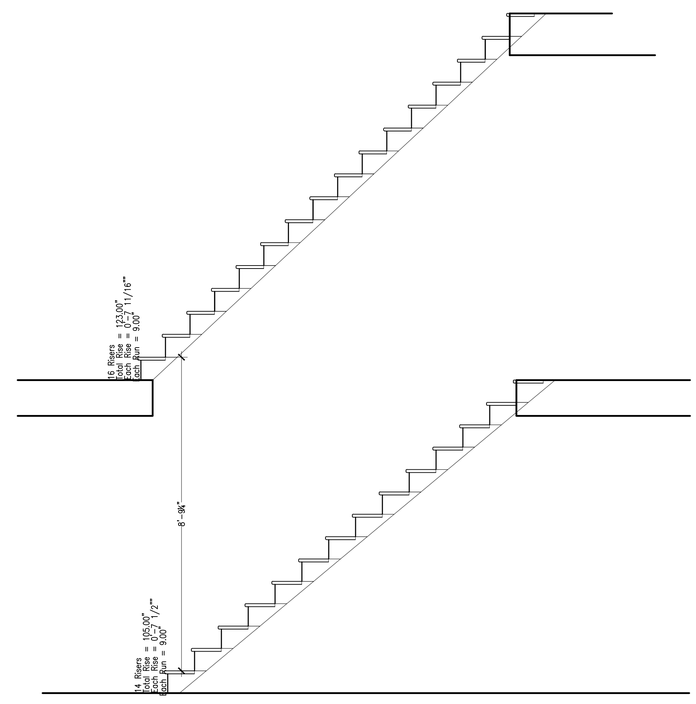

Stair Details (Section)
SCALE 1/2" = 1'-0"

PROJECT:542 Woodhill Road, Troy Ontario

PROJECT No:2021-065

Client: Connie Stephens

Classification : SMALL BUILDINGS

Original Signature:

WWW.VCINC.CA

VIRTUAL CREATIONS INC.
ARCHITECTURAL, CONSULTING SERVICES
(905) 481 1153 BCIN No. 28844
ERIC CANTON BCIN#25135

ISSUED:Dec 10 2021

AT VIRTUAL CREATIONS INC. THE BEST EFFORT HAS BEEN MADE TO RECORD EXISTING BUILDING STRUCTURES AND PROPOSED A COMPREHENSIVE SET OF CONSTRUCTION DRAWINGS. HOWEVER, THERE ARE AREAS AT THE TIME OF DESIGNING THAT ARE UNAVAILABLE OR INACCESSIBLE. WITH PROPER CO-ORDINATION WITH A BUILDER / CONTRACTOR THESE ISSUES CAN BE EASILY RESOLVED. IT IS THE CONTRACTORS RESPONSIBILITY TO USE FIGURED DIMENSIONS IN PREFERENCE TO SCALING. VERIFY AND CHECK ALL DIMENSIONS PRIOR TO AND DURING CONSTRUCTION. SUBMIT SHOP DRAWINGS OF ALL PREFABRICATED STRUCTURAL ELEMENTS SUCH AS WOOD TRUSSES AND ENGINEERED FLOOR SYSTEMS TO VIRTUAL CREATIONS FOR REVIEW BEFORE COMMENCING CONSTRUCTION. ALL DESIGNS AND DRAWINGS ARE THE SOLE PROPERTY AND COPYRIGHT OF VIRTUAL CREATIONS INC. ANY REPRODUCTIONS MUST BE AUTHORIZED BY VIRTUAL CREATIONS INC OR PURCHASED THROUGH VIRTUAL CREATIONS INC DIRECTLY.

A1-05